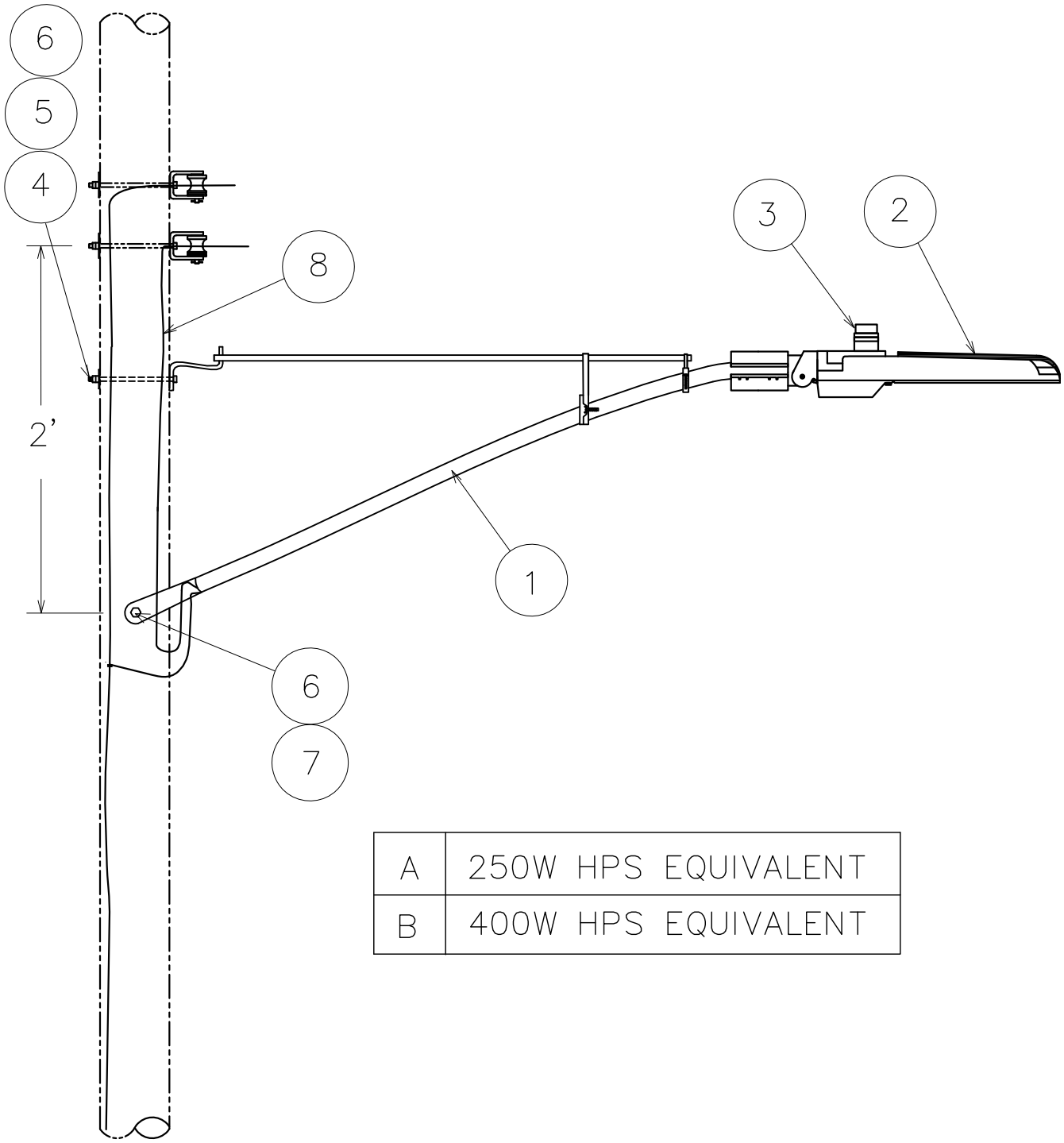

A	250W HPS EQUIVALENT
B	400W HPS EQUIVALENT

DRAWN BY:	DATE:	APPROVED BY:
CY/JC	1/25/16	DM 2/1/16
REVISED BY:	DATE:	APPROVED BY:

TITLE:

LED 250W OR 400W HPS EQUIVALENT LIGHT ON 14' MAST ARM

GARLAND POWER & LIGHT

STANDARD NO.:

OH-1015

Construction Standard No. OH-1015A

Title: LED 250 WATT HPS EQUIVALENT LIGHT ON 14' MAST ARM

Rev. Date: 1/7/2016

Pic #	Description	IBM NO.	Qty
1	BRACKET 14' UPSWEEP MAST ARM	528-10-80360	1
2	LUMINAIRE, GRAY LED, 250 WATT HPS EQUIVALENT	528-50-17030	1
3	NODE PHOTOCONTROLLER ROAM REN127NN1J50 50/BX	528-65-13000	1
4	BOLT MACHINE 5/8" X 14" W/NUT	285-08-10788	1
5	WASHER SQUARE 5/8" 250/BX	285-08-15320	1
6	WASHER SPRING DOUBLE COIL 5/8" 500/BX	285-08-85430	3
7	BOLT DOUBLE ARMING 5/8" X 14"	285-08-21552	1
8	#12 CABLE TYPE SIS STR SWBD 500 FT ROLL- truck stock	280-16-13605	20'

Garland Power & Light

OH-1015A

Construction Standard No. OH-1015B

Title: LED 400 WATT HPS EQUIVALENT LIGHT ON 14' MAST ARM

Rev. Date: 1/7/2016

Pic #	Description	IBM NO.	Qty
1	BRACKET 14' UPSWEEP MAST ARM	528-10-80360	1
2	LUMINAIRE, GRAY LED, 400 WATT HPS EQUIVALENT	528-50-17040	1
3	NODE PHOTOCONTROLLER ROAM REN127NN1J50 50/BX	528-65-13000	1
4	BOLT MACHINE 5/8" X 14" W/NUT	285-08-10788	1
5	WASHER SQUARE 5/8" 250/BX	285-08-15320	1
6	WASHER SPRING DOUBLE COIL 5/8" 500/BX	285-08-85430	3
7	BOLT DOUBLE ARMING 5/8" X 14"	285-08-21552	1
8	#12 CABLE TYPE SIS STR SWBD 500 FT ROLL- truck stock	280-16-13605	20'

Garland Power & Light

OH-1015B